AIR OUTLET

TOP DISCHARGE AREA SHOULD BE UNRESTRICTED FOR 100 INCHES MINIMUM. UNIT SHOULD BE PLACED SO ROOF RUN-OFF WATER DOSE NOT POUR DIRECTLY ON UNIT.

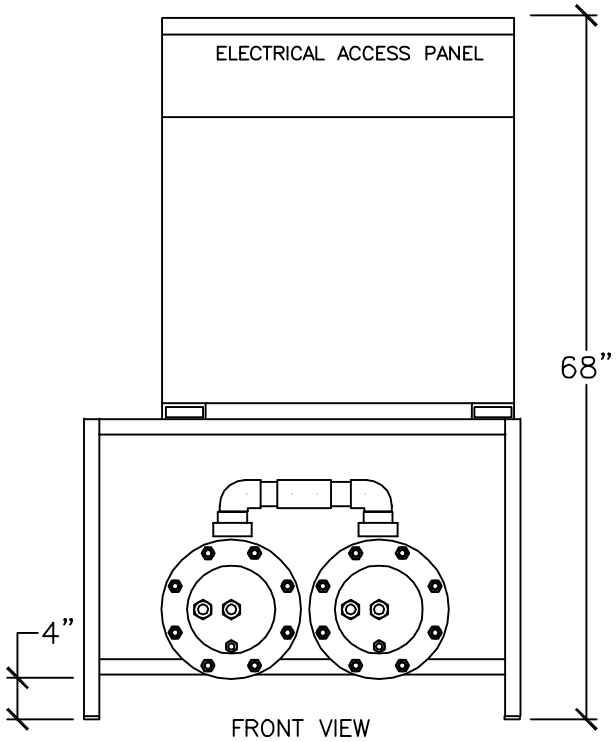

FRONT VIEW

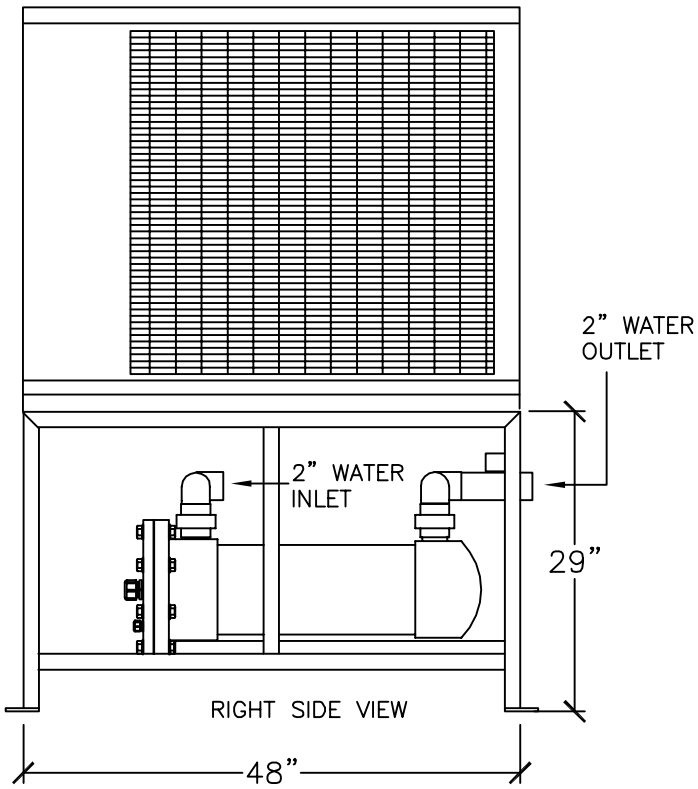

RIGHT SIDE VIEW

MINIMUM CLEARANCE FOR PROPER OPERATION IS 36 INCHES FROM THE WALLS, SHRUBBERY, FENCES, ETC. MINIMUM CLEARANCE BETWEEN ADJACENT UNITS IS 72 INCHES.

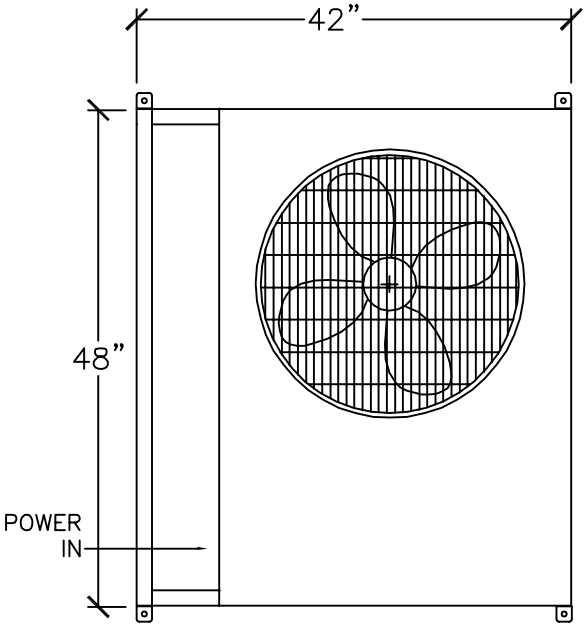

FRONT TOP VIEW

SPECIFICATIONS:

MODEL NO:	MT-9-460
HP:	7 1/2
VOLTS / PH / Hz	460 / 3 / 60
VOLTAGE MIN-MAX	414-506
TOTAL UNIT AMPS	17 RLA / 90 LRA
MIN. CIRCUIT AMP.	19.7
MAX. FUSE	25
MAX. BTUH OUTPUT	90,000
MIN - MAX WATER FLOW	60 / 120 GPM
FAN AIR OUTPUT	5,670 CFM
WEIGHT	475 LBS
REFRIGERANT TYPE	R-22

Aqua Logic, Inc.
8268 Clairemont Mesa Blvd. Suite 302
San Diego, CA 92111

TITLE: MT-9-460 460V 3PH CHILLER

LAST UPDATE: 9-1-05	DATE: 7-16-04	FILE: MT-9-460 7.5 Trane	BY CE